Loan Container Incoming Inspection

VADER® Pedicle System MIS-2-open

Overview Instrumentation

42-870-1

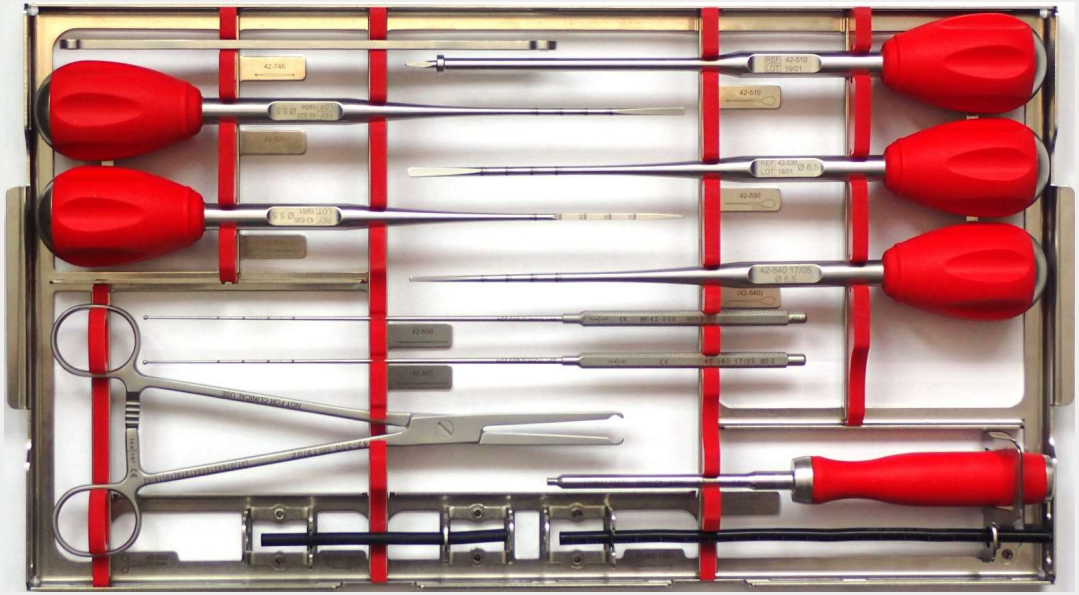

42-870-3

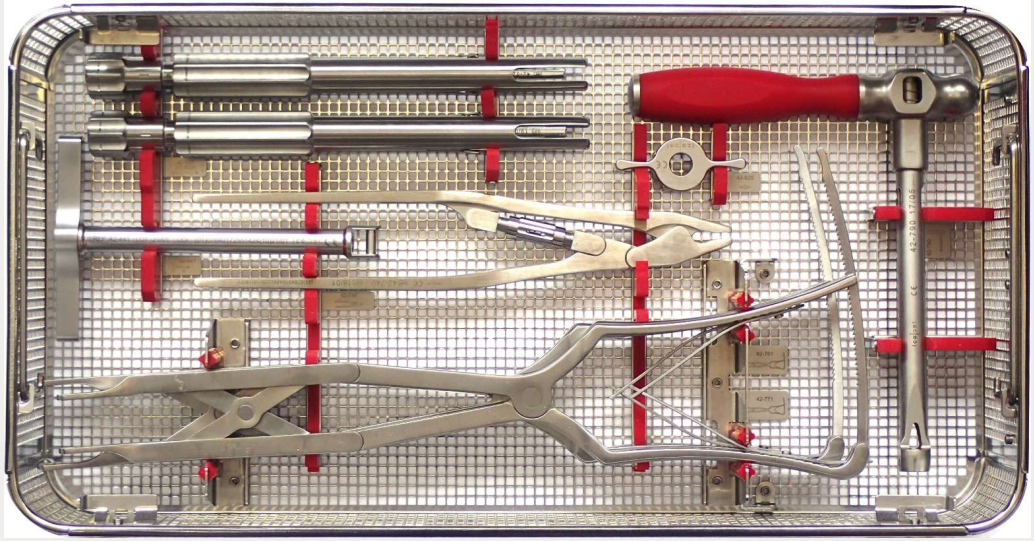

Overview Inspection Aids

- **Screw Ø 5.5 × 45 mm (H286)**
- **Nut Screw (H287)**

General Control

- **Do the contents of the container correspond to the kit profile?**
- **Are the instruments intact (not clearly damaged)?**
- **Is the laser marking legible/the data matrix code visible?**
  - Instruments where the laser marking is no longer legible must be replaced.
    Instruments where the data matrix code (UDI) is no longer visible must be replaced.
    (When available, a scanner can be used to check the data matrix code.)

- **Movable parts/joints – maintenance using surgical instrument oil!**

  → **Functional inspections for instruments** (see following pages)

- **If an instrument is replaced, all tests involving this instrument have to be repeated.**
- **Instructions of Reprocessing: 0191US, 0241US, 0252US**

Functional Inspection

- **Awl (42-510) and Thoracic Probe, Straight (42-535)**
  - Check tip

42-510

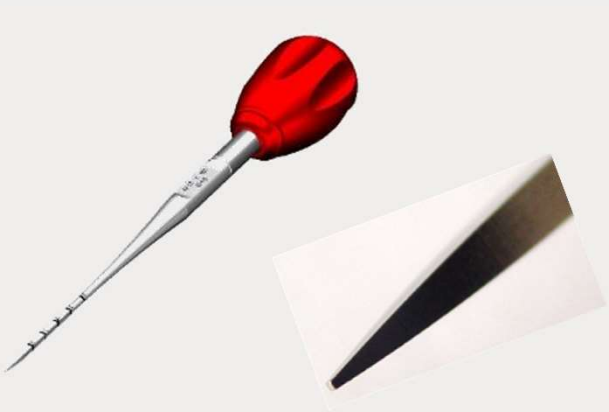

42-535

- **Cross-Link Screwdriver (42-595)**
  - Inbus is still intact (no significant signs of wear)

Functional Inspection

- **Forceps (42-500)**
  - Can be moved and engaged with low friction
  - Movable parts/joints – maintenance using surgical instrument oil!

Functional Inspection

- **Persuader Inline (42-820)**
  - Can be screwed in and out with low friction
  - Movable parts in the area of the clamping lever's surface of the component (42-820-2) – maintenance using surgical instrument oil according to illustration!
  - In preparation for sterilization, the persuader inline is placed in the container in a disassembled condition
  - Check for bent out wings when persuader inline is disassembled:

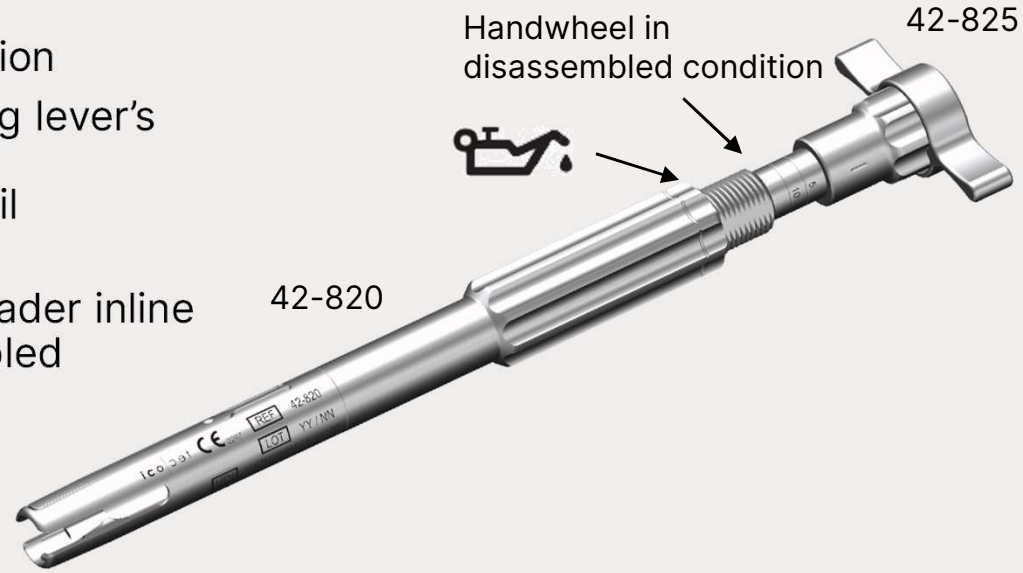

Good part

Reject part

- **Torque Increaser for Persuader Inline (42-825)**
  - Can be mounted on persuader inline (42-820)

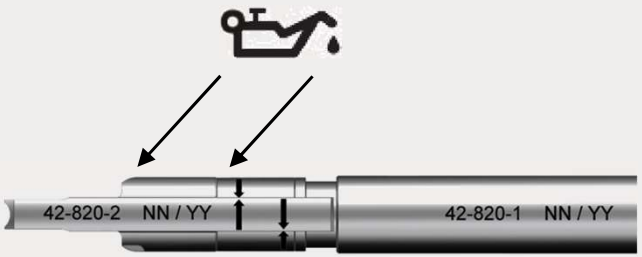

Functional Inspection

- **Pedicle Tester, Curved (42-560)**
  - Check curvature with drawing 002008 with 100% scaling and, if necessary, bend accordingly

- **Counter Torque Wrench (42-790)**
  - Check interface to tulip of a screw Ø 5.5 × 45 mm (H286; tulip must be able to be inserted without resistance and should fall out again)

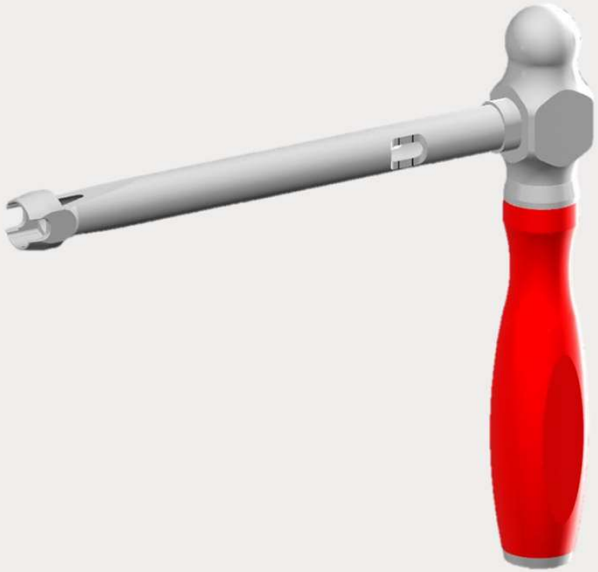

Functional Inspection

- **Screw Compressor (42-761) and Screw Distractor (42-771)**
  - Movable parts/joints – maintenance using surgical instrument oil!
  - Handles can be operated – **Attention, fingers!**
  - Toothed rod can be swiveled and presses actively against the handle with a spring

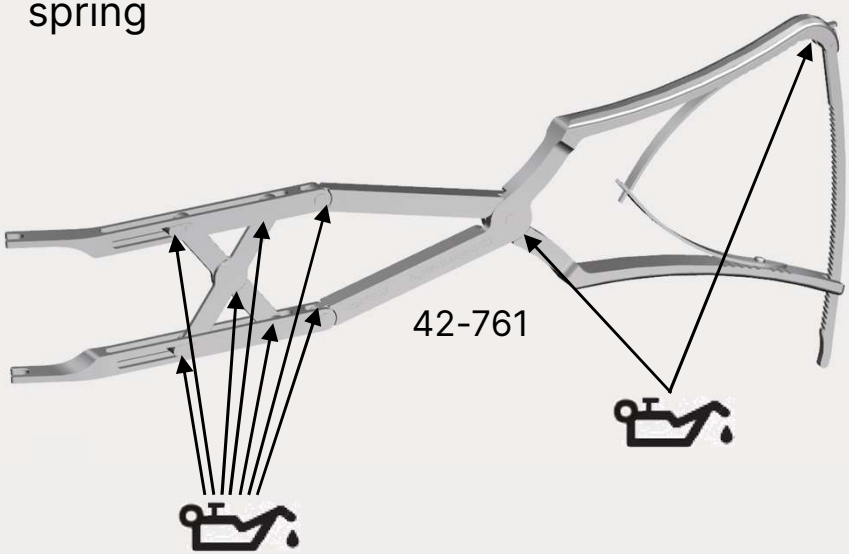

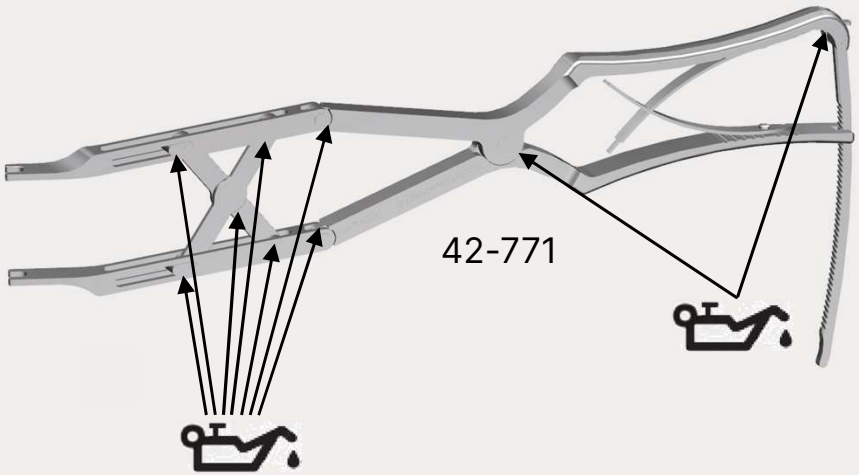

- **Rod Gripper (42-740)**
  - Movable parts/joints – maintenance using surgical instrument oil!
  - Sleeve can be adjusted

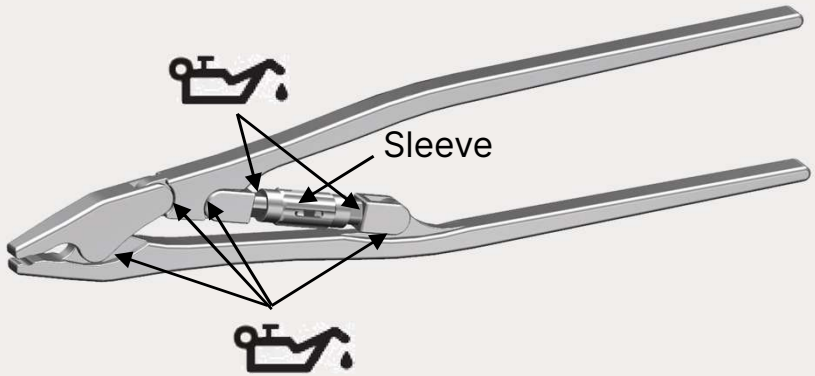

Revision Sleeve (42-441)

- Check revision sleeve with tulip of a screw Ø 5.5 × 45 mm (H286), nut screw (H287), and nut screw inserter MIS (42-655) by screwing into each other.

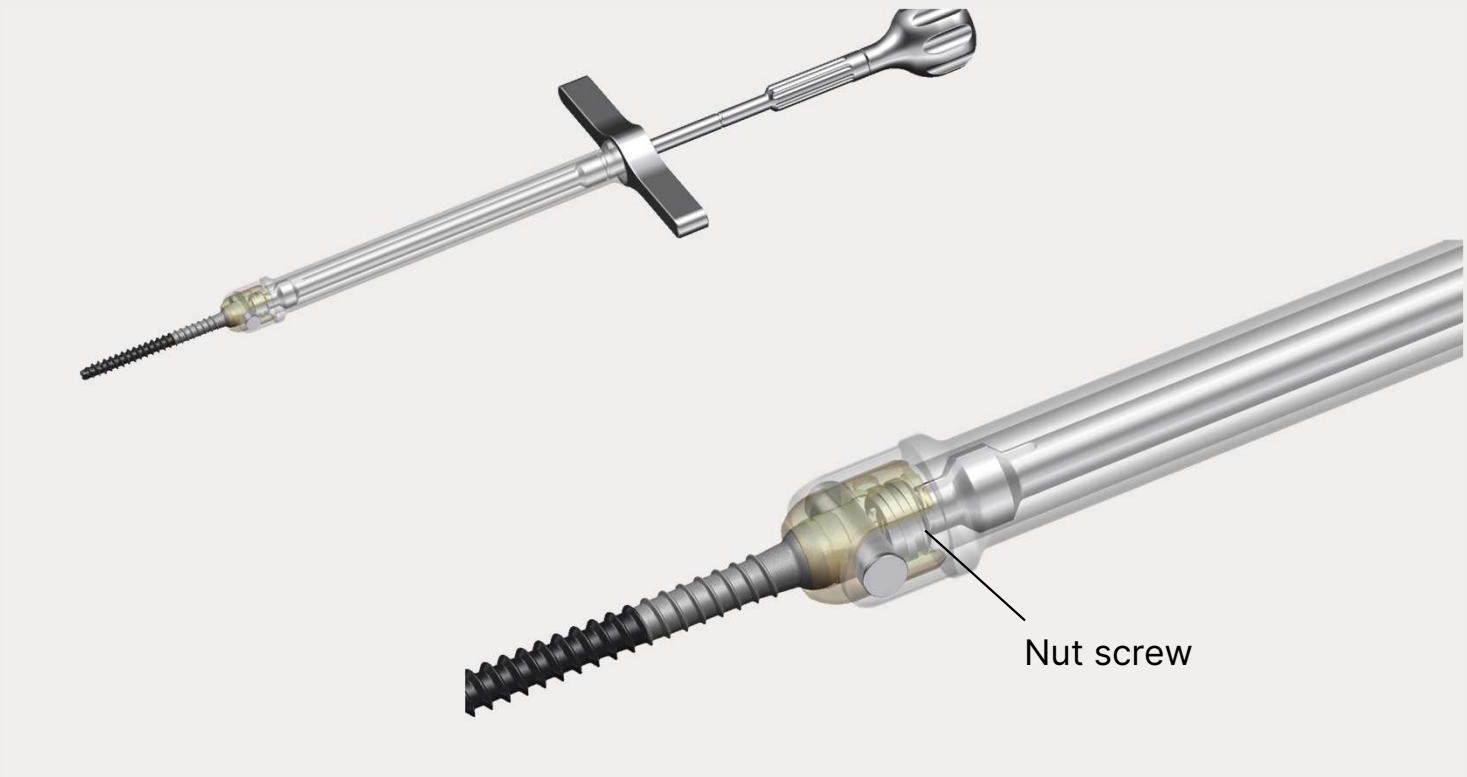

Drawing 002008

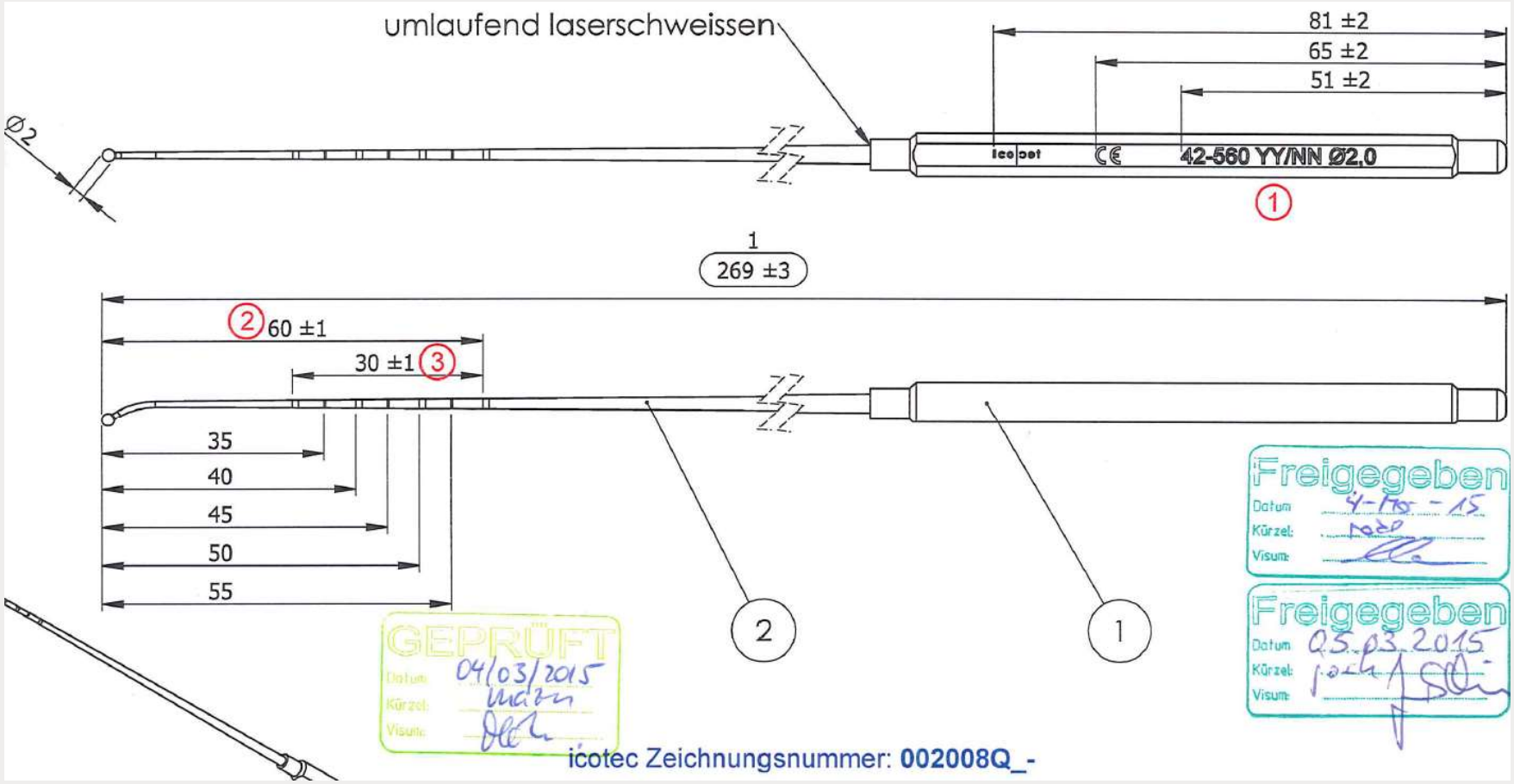

0254US.2025-06